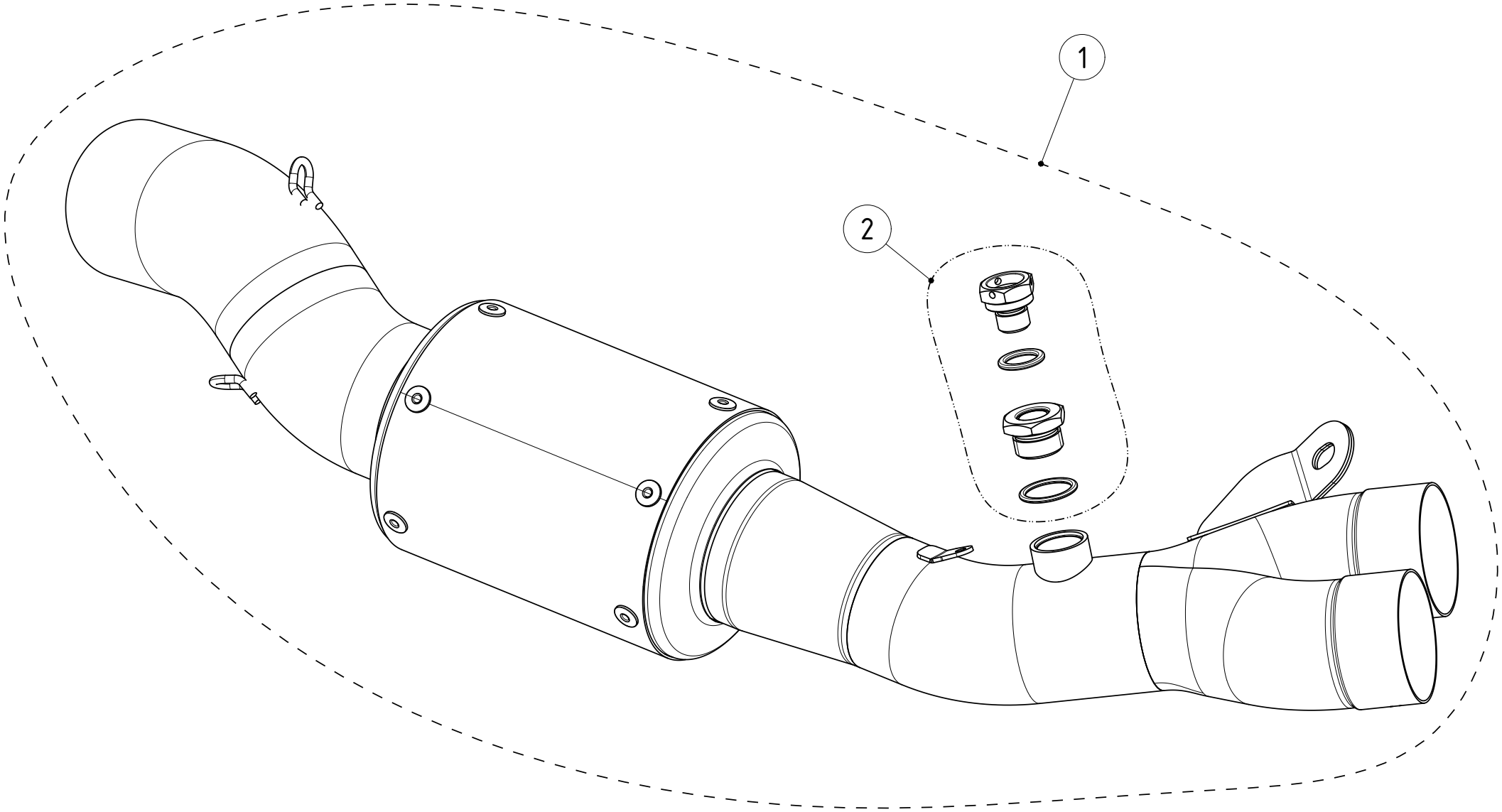

REVISION	DATE OF REVISION:
0	3.10.2025

No.	SalesCode	Description	Qty.
1	L-H10R16/TD	track day link pipe	1
2	P-HF284	lambda plug	1